Lucent RFG-M-RB Rubidium unit

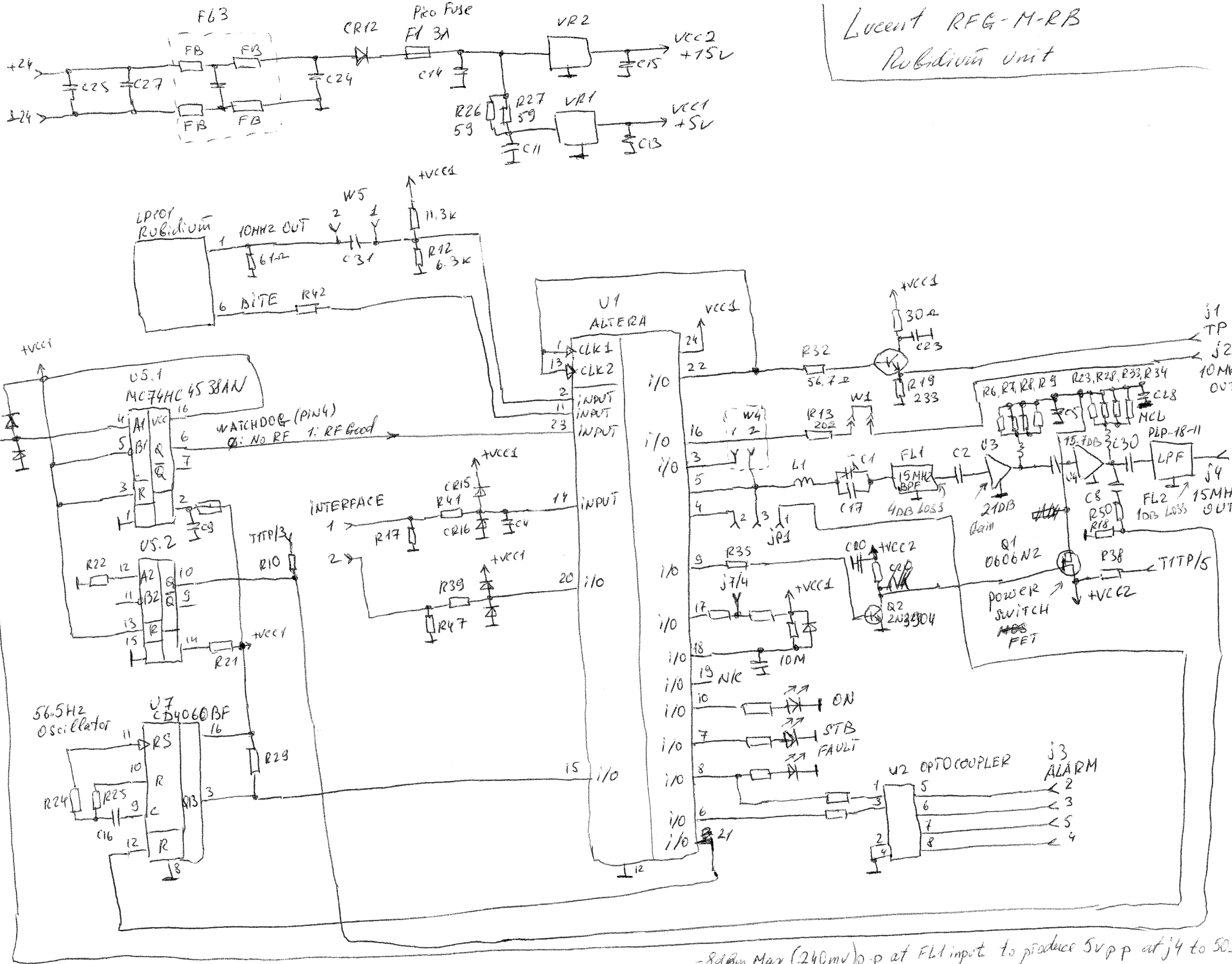

← RF Feed Back
Must be high enough to trigger U5.1 PIN 4.

-8dBm Max (240mV) p-p at FL1 input to produce 5Vpp at J4 to 50Ω
Max Safe – no distortion. 1.65Vpp at input of U4